Engineering drawing

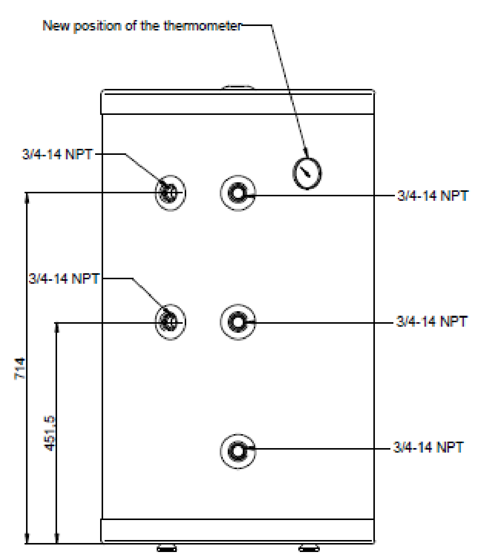

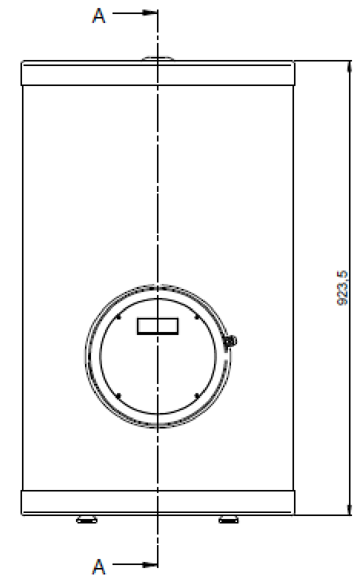

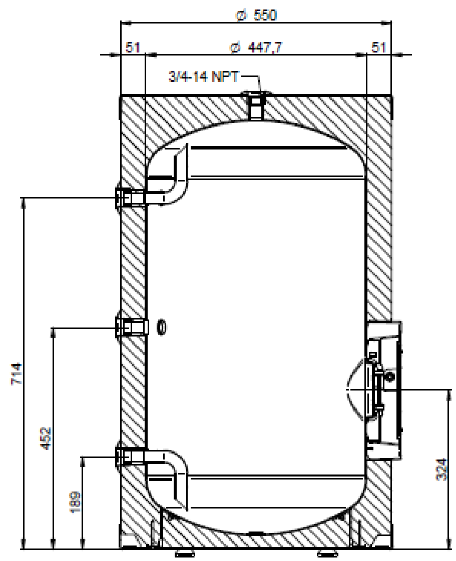

A-A

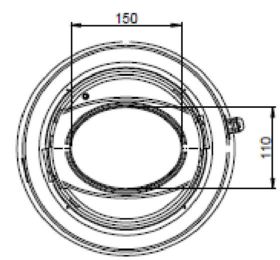

ECO KING

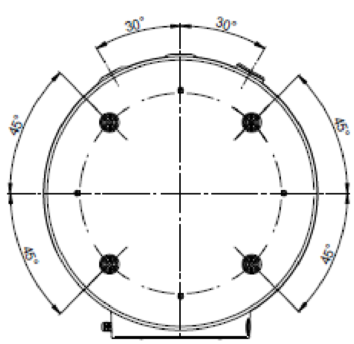

BOTTOM VIEW

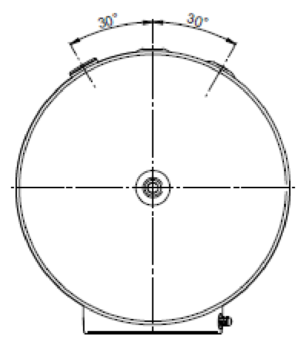

TECHNICAL FEATURES

- TANK IN AISI 316L STAINLESS STEEL
- NOMINAL CAPACITY: 120 l
- WELDING WITH ""PLASMA"" AND ""TIG"" TECHNOLOGY"
- MAX DOMESTIC WATER OPERATING PREASSURE: 1,0 MPa (10 bar)
- MAX OPERATING TEMPERATURE: 95°C
- INSULATION LAYER: POLYURETHANE CFC AND HCFC FREE DIRECT FOAMING, THICKNESS > 50 mm
- EXTERNAL COATING: COLOURED - BLACK - PLASTIC (PVC) THICKNESS 0,35 mm

TEST

- AIR PRESSURE TANK TEST: UNDER 6 bar TROUGH WATER IMMERSION TO VERIFY EVENTUAL COMPONENTS LEAKING (100%)

Trattamento	Nessun Trattamento
Data / Date	11-04-2019
Disegnato / Drawn by	Marcoccini R.
Formato / Size	A1
Scala / Scale	1:5
Peso / Weight (kg)	0,0000
Descrizione / Description	EK 32 US.GAL
Stato	IN LAVORO
Codice / Part nº	SC 176689
/	A
Rev.	00
Foglio / Sheet	1/1